ROBUS®

QUALITY PRODUCTS BY LED GROUP

SMD LED Brick Light

RBR24LEDS IP66 brick light

PLEASE READ INSTRUCTION BEFORE COMMENCING INSTALLATION AND RETAIN FOR FUTURE REFERENCES.
! Electrical products can cause death or injury, or damage to property. If in any doubt about the installation or use of this prodcut, consult a competent electrician

Note:
Product technical information and specification may change over time without prior notification
For the latest technical information please visit our web site WWW. ledgrouprobus. com or robusdirect. com

Specifications

Wall light for indoor or outdoor use, with sleeve for recess mounting in wall, 5mm thick glass, 2 cable entries for loop-in/loop-out wiring and 24 SMD light emitting diodes and stainless steel front trim.

Power consumption:	2.4W
Lumens:	90
Weight:	1.55kg
Voltage:	230-240V~ 50Hz
CCT:	6000K
CRI:	75
IP Rating:	IP66
Safety Class:	Class I (must be earthed)
Temperature range:	-20°C < ta < 40°C
Sleeve Dimensions:	L: 228mm x H: 74mm x D: 80mm
Cut Out: (not using sleeve):	200mm x 55mm

Terminals suitable for cable sizes from 0.75mm² to 1.5mm².
Suitable for mounting on normally flammable surface, e.g. wooden decking
Complies with EN60598-1, EN55015, EN61547, EN61000-3-2/-3

Installation

1. Ensure mains supply is switched-off before commencing installation
2. Mark wall with appropriate cut-out size
3. Before cutting, ensure that the hole does not impinge on joists, pipe work, cables or other building services
4. Disassemble fitting, removing front trim and glass, and loosen the printed circuit board carrying the LEDs
5. Fix sleeve to the wall, the front edge of the sleeve should be set back about 1mm from the wall face
6. Introduce suppler cable(s), connect Brown (Live) to L, Blue (Neutral) to N, and Yellow/Green to Earth
7. Tighten cable gland(s) to ensure a waterproof seal. Re-fit circuit board
8. Re-fit glass and front trim, ensure that the glass and front trim are refitted securely with the screws fully tightened to ensure waterproof seal
9. Finally locate the fitting in the sleeve and secure with the screws provided

Stainless Steel Fittings - Maintenance Instructions
The stainless steel trim on this product has very high resistance to corrosion. Despite this, blotches may appear on the surface of the stainless steel. They can be removed by a soft cloth soaked with neutral oil (WD-40 or equivalent). The cause of the blotching is due to some free iron atoms from the polishing wire brushes remaining on the surface and these atoms are outside the protection afforded by the nickel and chrome alloys in the steel.
Note: - If the product is exposed to very corrosive environmental conditions (sea fronts, salty atmospheres etc) it will require additional maintenance. Before installing, the stainless steel parts must be treated with neutral oil, which must penetrate all the joints. After treatment, dry with a soft cloth. In very corrosive environments, the treatment with oil must be repeated at least 4 times a year. In cases of serious corrosion use an abrasive paste (specifically designed for stainless steel or chrome) to remove the stain and then apply the neutral oil again.
Attention: Wood preservative and solvents can damage insulation on electric cables. Allow treatment to dry prior to installing deck lights. Do not apply preservatives after installing.

Information for the Product user:

1. Please note the requirement to dispose of Waste Electrical & Electronic Equipment separately from household waste (WEEE marked with crossed out wheelie bin symbol).
2. Please consider your role in contributing to re-use and recycling by returning this product at end of life to a collection centre for waste electrical equipment or a Civic Amenity site, or to a retail outlet from which you are purchasing a replacement.
3. This equipment may contain substances that are hazardous to health and the environment if disposed of carelessly. It is important that it is separated from normal household waste and recycled in the WEEE chain
4. The “crossed out wheelie bin symbol” on a product indicates this equipment must not be disposed of in normal household waste, but should be disposed of according to local WEEE regulations

The Installation must be carried out by a qualified electrician

LED Group
Western Retail Park
Nangor Road
Dublin 12
Ireland
Issue 3 031114

Tel: +353 1 7099000
Fax: +353 1 7099060
Email: info@led.ie
Website: www.led.ie

ISO 9001:2008
ERA
QUALITY ASSURED COMPANY

Installation diagram

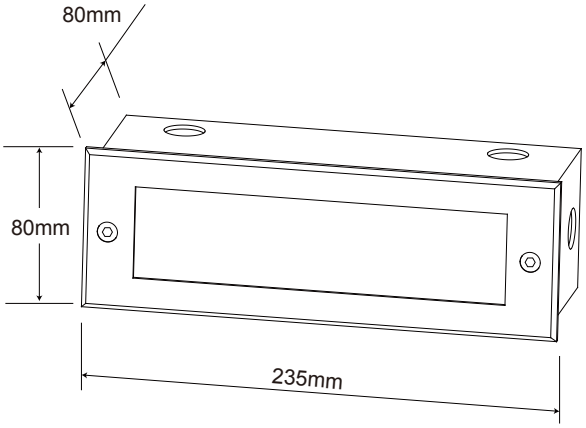

1

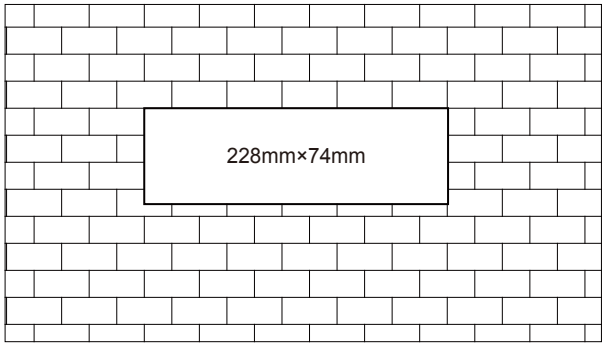

2

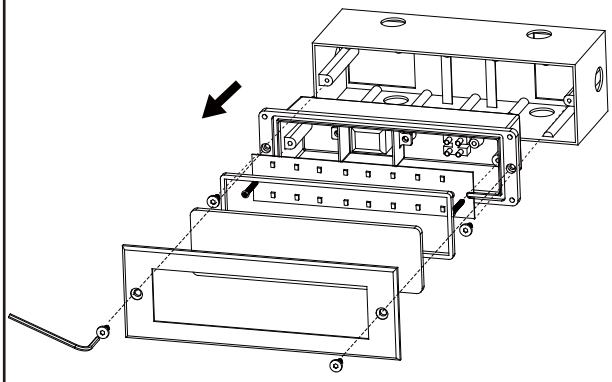

3

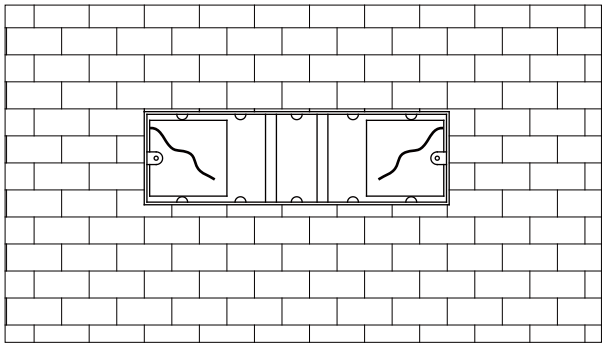

4

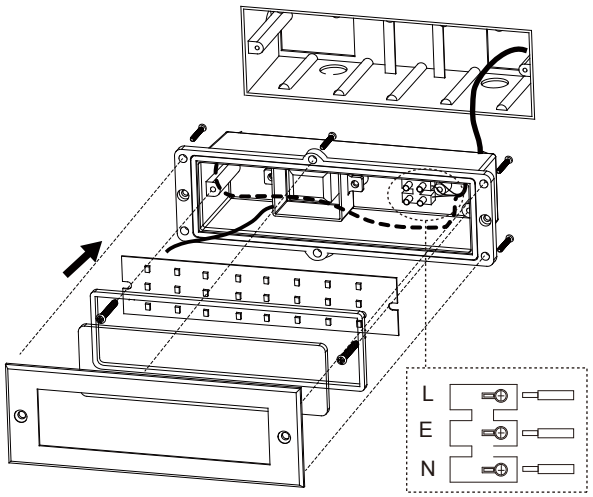

5

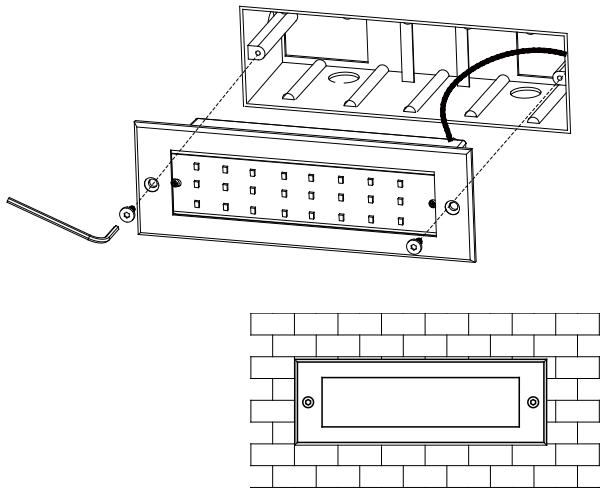

6

The Installation must be carried out by a qualified electrician

LED Group
Western Retail Park
Nangor Road
Dublin 12
Ireland

Tel: +353 1 7099000
Fax: +353 1 7099060
Email: info@led.ie
Website: www.led.ie