40W LED PANEL

2751401 2751402 2751409 2751403 2751405

5 YR WARRANTY | IP 20 | L2

600 x 600mm
Standard, 4000K - 2751401
Standard, 5000K - 2751402
Emergency, 4000K - 2751409

300 x 1,200mm
Standard, 4000K - 2751403

600 x 1,200mm
Standard, 4000K - 2751405

40W LED Panel White

APPLICATIONS

- Versatile fitting which is suitable for a wide range of applications such as offices, shops, reception areas, restaurants, hotels schools & hospitals

SPECIFICATION

- LED alternative for T8 LED fluorescent lay-in modular fittings
- Fits into standard size ceiling grid of 15mm to 24mm
- Emergency options available
- Suitable for switching by PIR, Microwave sensor or photocell

TECHNICAL DETAILS

- Efficacy 88 lm / cctW
- CRI 80
- IP20
- CCT 4,000K & 5,000K

OPTIONS

- Available in; 600x600mm, 4000K & 5000K, standard and emergency
- 300x1,200mm, 40W
- 600x1,200mm, 60W

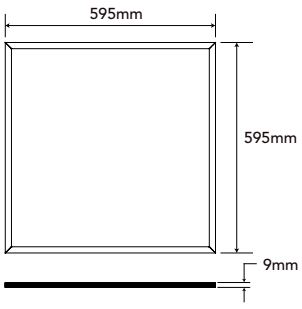

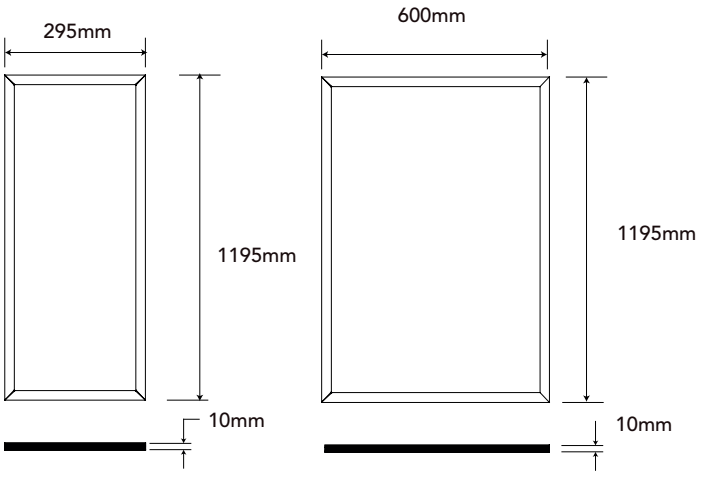

CODE	DESCRIPTION
2751401	40W LED Panel, IP20, 600x600mm, White, 4000K
2751402	40W LED Panel, IP20, 600x600mm, White, 5000K
2751409	40W LED Panel, IP20, 600x600mm, White, 4000K, Emergency
2751403	40W LED Panel, IP20, 300x1200mm, White, 4000K
2751405	60W LED Panel, IP20, 600x1200mm, White, 4000K

Kellihers Electrical
Ballymullen
Tralee
Co. Kerry
Ireland

Tel: 066 714 5300
Fax: 066 712 1775
Company number: 273572
VAT number: IE 8273572S
WEE number: IE 00362W

Registered in Ireland